GREENRIDGE SECONDARY SCHOOL
2025 END-OF-YEAR EXAMINATION
SECONDARY TWO

G3

CANDIDATE NAME

CLASS -

INDEX NUMBER

G3 MATHEMATICS **4052/01**

Paper 1 26 September 2025

1 hour 15 minutes

Candidates answer on the Question Paper.

Additional Materials: Nil

READ THESE INSTRUCTIONS FIRST

Write your class, index number and name on all the work you hand in.
Write in dark blue or black pen.
You may use an HB pencil for any diagrams or graphs.
Do not use staples, paper clips, glue or correction fluid.

Answer **all** questions.
If working is needed for any question it must be shown with the answer.
Omission of essential working will result in loss of marks.
The use of an approved scientific calculator is expected, where appropriate.
If the degree of accuracy is not specified in the question, and if the answer is not exact, give the answer to three significant figures. Give answers in degrees to one decimal place.
For π, use either your calculator value or 3.142, unless the question requires the answer in terms of π.

The number of marks is given in brackets [ ] at the end of each question or part question.
The total of the marks for this paper is 50.

For Examiner's Use	
Total	50

[Turn over

Answer **all** the questions.

1 **(a)** Express 579.2836 correct to 1 decimal place.

Answer ..... [1]

(b) Express $3\frac{1}{8}\%$ as a fraction.

Answer ..... [1]

---

2 **(a)** Solve the inequality $5-2x \geq 3x+10$.

Answer ..... [2]

(b) Represent the solution on the number line below.

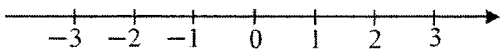

[1]

---

3 Factorise the following completely.

(a) $3x^2-27y^2$

Answer ..... [2]

(b) $ab-7a-3b^2+21b$

Answer ..... [2]

[Turn over

4 It is given that $h = 3g + \frac{1}{2}t^2$.

(a) Find h when $g = 2$ and $t = 5$.

Answer h=..... [1]

(b) Express t as the subject of the formula.

Answer t=..... [2]

---

5 Given that $(x+y)^2 = 50$ and $xy = 5$, find the value of

(a) $x^2 + y^2$,

Answer ..... [2]

(b) $(x-y)^2$.

Answer ..... [2]

---

6 The value of a ring increased from \$25 000 to \$28 000.
Find the percentage increase in the price.

Answer .....% [2]

---

7 The number 972 written as a product of its prime factors is $2^2 \times 3^5$.

(a) Express 504 as a product of its prime factors.

Answer ..... [1]

(b) Find the smallest integer value of n such that $504n$ is a multiple of 972.

Answer ..... [1]

(c) Using your answer in **(a)**, explain why 504 is not a perfect square?

Answer .....

..... [1]

[Turn over

8 **(a)** Simplify $\frac{7p^2qr}{14pq^3}$.

Answer ..... [1]

(b) Express as a fraction in its simplest form $\frac{5}{(x-2)^2}+\frac{1}{2-x}$.

Answer ..... [3]

---

9 **(a)** Find the size of an exterior angle of a regular polygon with 15 sides.

Answer ..... [2]

(b) A polygon has n sides. Three of its interior angles are 153°, 144° and 100°.
The remaining angles are each 149°. Find the value of n.

Answer $n =$..... [3]

---

10 A right pyramid has a vertical height of 35 m, slant height of 37 m and occupies a volume of 6720 m^3. The pyramid has a square base of length x m.

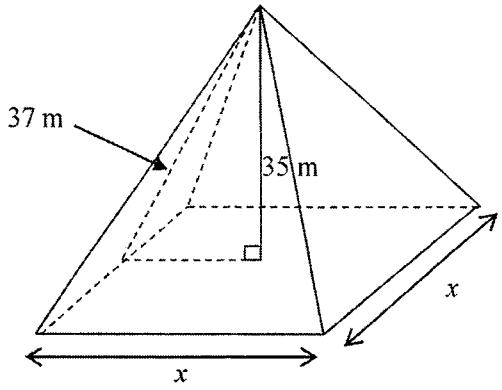

(a) Show that $x = 24$.

Answer

[2]

(b) Calculate the total surface area of the pyramid.

Answer ..... m^2 [2]

[Turn over

11 **(a)** A bag contains 10 red marbles, 7 blue marbles, 6 green marbles and 1 white marble. A marble is drawn at random. Find the probability that the marble is

(i) blue,

Answer ..... [1]

(ii) not red.

Answer ..... [1]

(b) x more green marbles were added in the bag. Given that the probability of drawing a green marble is $\frac{1}{3}$ after the addition, find the value of x.

Answer ..... [2]

---

12 A ladder, AC, 2 m long, is placed against a wall such that the bottom of the ladder is 0.4 m from the wall, AB.

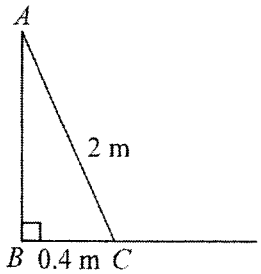

The safe working angle for the ladder is between 74° and 76° to the ground at point C. Explain if the ladder is in a safe position to use. Show your calculations clearly.

Answer .....

..... [3]

---

13 In the diagram, the two quadrilaterals are congruent. It is given that $AB = 7.8$ cm, $CD = 5.2$ cm, $EF = 4$ cm, $FC = 5.6$ cm, $\angle FAB = 63°$, $\angle FCD = 110°$ and $\angle DEF = 80°$.

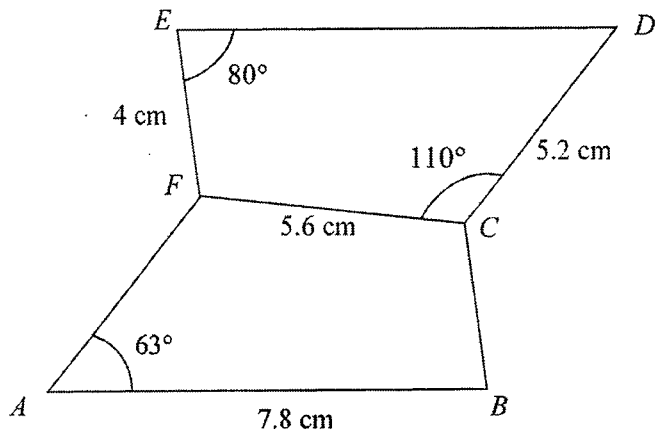

(a) Name the quadrilateral that is congruent to $ABCF$.

Answer ..... [1]

(b) Find the length of AF.

Answer ..... cm [1]

(c) Find obtuse angle BCD.

Answer Angle BCD =..... [2]

[Turn over

14 The diagram below shows a solid metallic sculpture. The solid metallic sculpture consists of a hemisphere and a conical support. The radius of the hemisphere is 6 cm and the diameter of the cone is 8 cm. The slant height of the cone is 7 cm.
Taking π to be 3.142, find

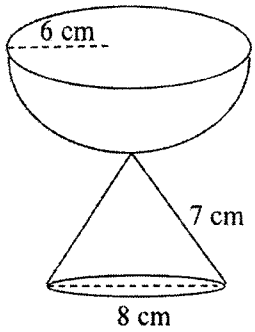

(a) the volume of the hemisphere,

Answer ..... cm^3 [2]

(b) the amount of paint needed to paint the metallic sculpture completely if 1 litre of paint is needed to paint an area 400 cm^2.

Answer ..... litres [3]

END OF PAPER

GREENRIDGE SECONDARY SCHOOL
2025 END-OF-YEAR EXAMINATION
SECONDARY TWO

G3

CANDIDATE NAME

CLASS - INDEX NUMBER

G3 MATHEMATICS **4052/02**

Paper 2 2 October 2025

1 hour 15 minutes

Candidates answer on the Question Paper.

Additional Materials: Nil

READ THESE INSTRUCTIONS FIRST

Write your class, index number and name on all the work you hand in.
Write in dark blue or black pen.
You may use an HB pencil for any diagrams or graphs.
Do not use staples, paper clips, glue or correction fluid.

Answer **all** questions.
If working is needed for any question it must be shown with the answer.
Omission of essential working will result in loss of marks.
The use of an approved scientific calculator is expected, where appropriate.
If the degree of accuracy is not specified in the question, and if the answer is not exact, give the answer to three significant figures. Give answers in degrees to one decimal place.
For π, use either your calculator value or 3.142, unless the question requires the answer in terms of π.

The number of marks is given in brackets [ ] at the end of each question or part question.
The total of the marks for this paper is 50.

For Examiner's Use	
Total	50

Answer **all** the questions.

1 A printing company charges \$$C$ for printing n number of pages.
The table below shows the cost of printing and the corresponding number of pages printed.

Pages (n)	20	50	80	100
Cost (\$$C$)	2.40	6.00	9.60	12

(a) Show that C and n are directly proportional.

Answer

.....

.....

..... [2]

(b) Write down an equation connecting C and n.

Answer ..... [1]

(c) Find the number of pages printed if the cost of printing is \$27.

Answer ..... pages [1]

[Turn over

2 In the figure below, triangle ABC is similar to triangle DCE.
Given that $AB = 9$ cm, $BC = 12$ cm, $CE = 8$ cm and angle $ABC = 90°$.

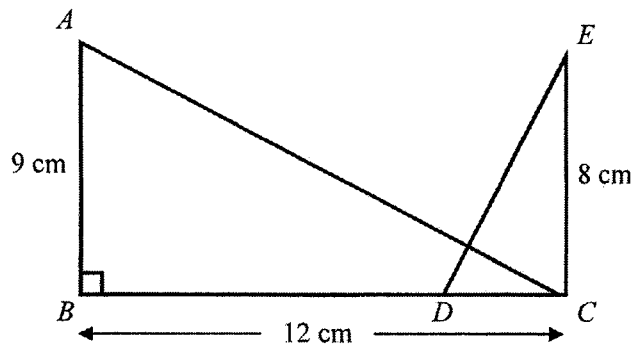

Find

(a) angle DCE,

Answer Angle DCE = ... [1]

(b) the length of DC,

Answer ..... cm [2]

(c) the length of DE.

Answer ..... cm [2]

3 A map of Singapore has a scale of 1 : 200 000.

(a) The scale can be written in the form 1 cm : n km.
Find the value of n.

Answer $n =$ ..... [1]

(b) The length of Bukit Timah Expressway (BKE) is 11.2 km.
Find the length, in centimetres, of the expressway on the map.

Answer ..... cm [2]

(c) The area of Choa Chu Kang on the map is 1.5 cm^2.
Calculate the actual area of Choa Chu Kang in square kilometres.

Answer ..... km^2 [2]

[Turn over

4 The diagram shows one rectangle, A and one square, B.
The dimensions, in centimetres, of the quadrilaterals are shown below.

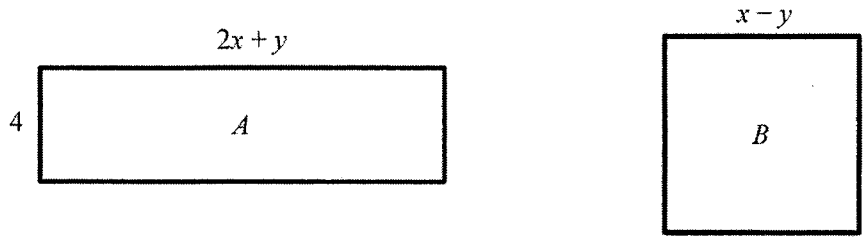

(a) The area of rectangle A is 36 cm^2.
Find y in terms of x.
Give your answer in its simplest form.

Answer $y =$ ..... [1]

(b) The length of square B is 2 cm more than the breadth of rectangle A.
Find y in terms of x.
Give your answer in its simplest form.

Answer $y =$ ..... [1]

(c) Solve the simultaneous equations found in **(a)** and **(b)**.

Answer $x =$ .....

$y =$ ..... [3]

(d) David cuts the entire rectangle A into squares of length 1 cm.
He claims that he can use all the 1 cm squares to cover square B.
Do you agree with him? Explain clearly.

Answer

.....

.....

.....

[2]

[Turn over

5 Two classes of students, Class X and Class Y, each planted sunflower seeds.
After 8 weeks, the height of each plant was measured in centimetres.
The results are shown in the stem-and-leaf diagram below.

Leaves for Class X						Stem	Leaves for Class Y					
					2	12						
		7	5	3	1	13	0	1	3	8		
9	7	6	1	0	0	14	1	2	5	5	9	
		6	5	4	3	15	0	0	0	6	6	7
9	4	2	2	2	1	16	1	2	4	6		
					0	17	0	1				

Key: 7 | 14 represents 14.7 cm

Key: 15 | 6 represents 15.6 cm

(a) Find the difference in the height of the tallest and the shortest plant in Class X.

Answer ..... cm [1]

(b) Find the modal height of the plant in Class X.

Answer ..... cm [1]

(c) Find the median height of the plant in Class Y.

Answer ..... cm [1]

(d) A plant is considered healthy if its height is at least 14 cm.
Calculate the percentage of plants in Class Y that is not healthy.

Answer ..... % [2]

(e) Which class had taller plants? Explain.

Answer Class ..... because .....

..... [2]

6 **(a)** The variables x and y are connected by the equation $y = 4 - 3x - x^2$.
Some corresponding values of x and y are given in the table below.

x	-5	-4	-3	-2	-1	0	1
y	p	0	4	6	6	4	0

Calculate the value of p.

Answer $p =$ ..... [1]

(b) On the grid, draw the graph of $y = 4 - 3x - x^2$ for $-5 \le x \le 1$. [3]

Answer

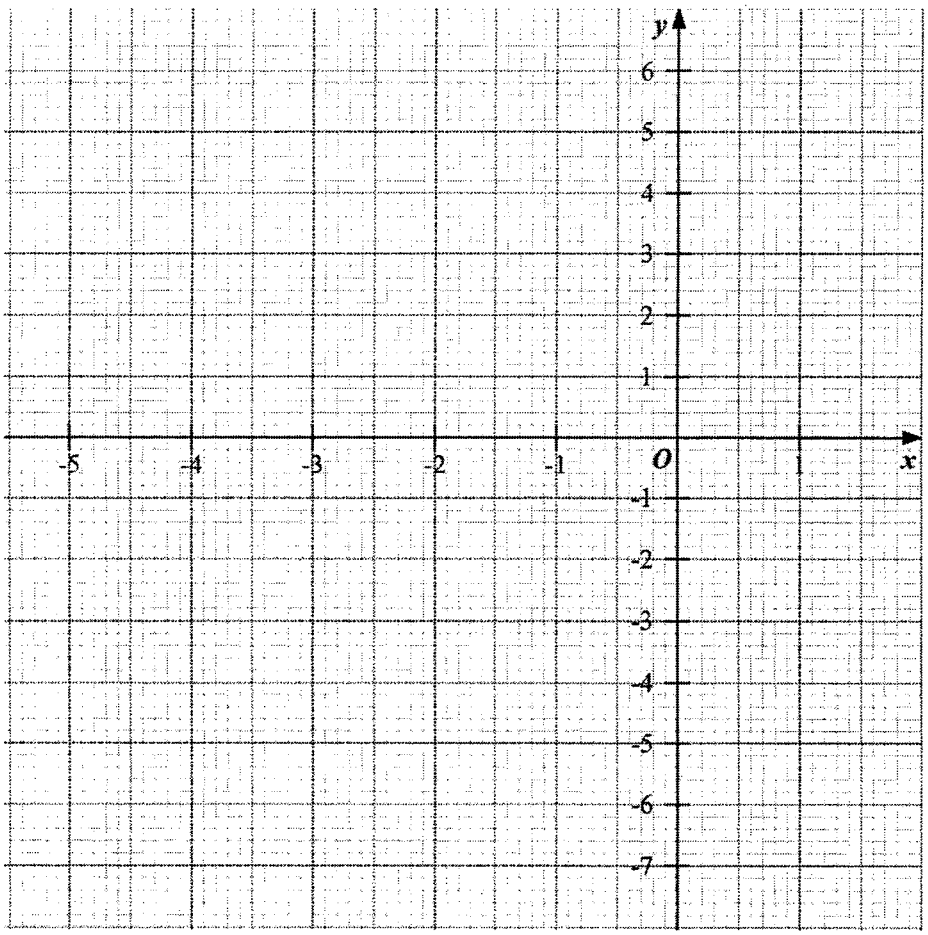

[Turn over

(c) Using your graph, write down the maximum value of $y = 4 - 3x - x^2$.

Answer ..... [1]

(d) Write down the equation of the line of symmetry of the curve $y = 4 - 3x - x^2$.

Answer ..... [1]

(e) **(i)** On the grid, draw the line $y = x + 5$ for $-5 \le x \le 1$. [1]

(ii) Write down the x-coordinates of the points of intersection of the two graphs.

Answer $x =$ ..... or $x =$ ..... [2]

7 The diagram shows part of a number grid.

1	2	3	4	5
6	7	8	9	10
11	12	13	14	15
16	17	18	19	20
21	22	23	24	25

A shape outlining 3 numbers, as shown, is placed on the grid.

(a) The shape is placed in a different position on the grid.
Complete the shape below to show the numbers outlined.

Answer

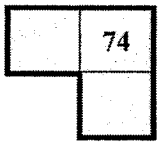

[1]

(b) The shape is now placed in another position on the grid.
The smallest number on this shape is x, as shown below.

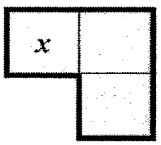

(i) Write down the largest number in this shape in terms of x.

Answer ..... [1]

(ii) The product of the largest and smallest number in this shape is 135.
Form an equation, in terms of x, and show that it reduces to $x^2 + 6x - 135 = 0$.

Answer [2]

[Turn over

(iii) Solve the equation $x^2 + 6x - 135 = 0$.

Answer $x =$ ..... or $x =$ ..... [2]

(iv) Hence, find the total of the three numbers in this shape.

Answer ..... [1]

8 Sophie wants to maintain a healthy lifestyle and plans to work out at the gym regularly. She is comparing several gyms in her area, each offering different fees, as shown in the table below.

Gym	Fees for Adults
Activate Gym	$4 per visit
EveryTime Fitness	$75 per month
Active Lifestyle	$22.50 per week
Gym Pack	12am to 7am $4.50 per person (for 1 person) $3.50 per person (for 2 people) 7am to 12am $5.50 per person (for 1 person) $4.50 per person (for 2 people)

(a) Sophie is advised to engage in 150 – 300 minutes on moderate intensity workout weekly.
She chooses inclined walking on a treadmill for 45 minutes for each session which is available in all the gyms above.
Given that she plans to exercise for the maximum recommended time, calculate the cost for her to use Activate Gym for one week.

Answer $ ..... [2]

(b) Sophie plans to go to Gym Pack during lunchtime with her friend.
Calculate the percentage decrease in price if she goes to the gym with her friend instead of going alone.

Answer .....% [2]

[Turn over

(c)

Activity	Calories burnt per hour
Walking (5 km/h, flat)	240
Walking (5 km/h, incline)	350
Cycling (moderate)	400
Swimming (moderate)	350

This week, Sophie continues her inclined treadmill walking at 5 km/h, while her friend cycles at a moderate intensity.
If Sophie wants to burn the same total calories as her friend but still keep to inclined walking at 5 km/h, what adjustments could she make to her workout?

Answer ..... [2]

END OF PAPER

Marking Scheme For 2025 Greenridge Secondary 2G3 Mathematics End of Year Examination Paper 1

2025 GSS Sec 2G3 EOY Paper 1

Item	Worked Solutions	Marks Awarded	Remarks
1(a)	579.3	B1	
1(b)	$\frac{1}{32}$	B1	
2(a)	$5-2x \geq 3x+10$ $-2x-3x \geq 10-5$ $-5x \geq 5$ $x \leq -1$	M1 A1	
2(b)	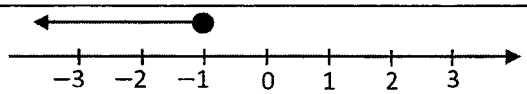	B1	
3(a)	$3x^2-27y^2=3(x^2-9y^2)$ $=3(x-3y)(x+3y)$	M1 A1	
3(b)	$ab-7a-3b^2+21b$ $=a(b-7)-3b(b-7)$ $=(a-3b)(b-7)$	M1 A1	
4(a)	$h=3(2)+\frac{1}{2}(5)^2$ $h=18.5$	 B1	
4(b)	$h=3g+\frac{1}{2}t^2$ $2h=6g+t^2$ $t^2=2h-6g$ $t=\pm\sqrt{2h-6g}$	 M1 A1	 No A1 if no $\pm$
5(a)	$(x+y)^2=50$ $x^2+2xy+y^2=50$ $x^2+y^2+2(5)=50$ $x^2+y^2=40$	M1 A1	For expansion
5(b)	$(x-y)^2$ $=x^2-2xy+y^2$ $=x^2+y^2-2xy$ $=40-2(5)$ $=30$	 M1 A1	 For expansion

Marking Scheme For 2025 GSS Sec 2G3 Mathematics End of Year Examination Paper 1

6	$\frac{28000-25000}{25000}\times 100\%$ $=12\%$	M1 A1	
7(a)	$2^3\times 3^2\times 7$	B1	
7(b)	$504n=2^3\times 3^2\times 7\times n$ $n=3^3$ $n=27$	B1	
7(c)	$504=2^3\times 3^2\times 7$ 504 is not a perfect square because not all its prime factors have power **divisible by 2/multiple of 2/even numbers.**	B1	
8(a)	$\frac{7p^2qr}{14pq^3}=\frac{pr}{2q^2}$	B1	
8(b)	$\frac{5}{(x-2)^2}+\frac{1}{2-x}$ $=\frac{5}{(x-2)^2}-\frac{1}{x-2}$ $=\frac{5}{(x-2)^2}-\frac{1(x-2)}{(x-2)^2}$ $=\frac{5-x+2}{(x-2)^2}$ $=\frac{7-x}{(x-2)^2}$	M1 M1 A1	Changing the sign of the fraction Change to same denominator
9(a)	1 exterior angle $=\frac{360°}{15}$ $=24°$ or 1 interior angle $=\frac{(15-2)\times 180}{15}$ $=156°$ 1 exterior angle = 180°-156° $=24°$	M1 A1 or M1 A1	

Marking Scheme For 2025 GSS Sec 2G3 Mathematics End of Year Examination Paper 1

9(b)	$153°+144°+100°+(n-3)\times149°=(n-2)\times180$ $397°+149n-447=180n-360$ $149n-180n=-360+50$ $-31n=-310$ $n=10$ *or* $(180°-153°)+(180°-144°)+(180°-100°)+$ $(n-3)(180°-149°)=360°$ $27°+36°+80°+(n-3)(31°)=360°$ $(n-3)(31°)=217°$ $n-3=7$ $n=10$	M1 M1 A1 M1 M1 A1	Forming equation Expand and simplify
10(a)	Volume of pyramid$=\frac{1}{3}\times(x\times x)\times35$ $6720=\frac{35}{3}x^2$ $x^2=576$ $x=\pm\sqrt{576}$ $x=24(shown)$ or $x=-24(reject)$	M1 A1	
10(b)	Total surface area$=(24\times24)+4\left(\frac{1}{2}\times24\times37\right)$ $=576+1776$ $=2352\text{ m}^2$	M1 A1	
11(a)(i)	$\frac{7}{24}$	B1	
11(a)(ii)	$1-\frac{10}{24}=\frac{14}{24}$ $=\frac{7}{12}$	B1	
11(b)	$\frac{6+x}{24+x}=\frac{1}{3}$ $18+3x=24+x$ $2x=6$ $x=3$ 2units → 18 1 unit → 9 9-6=3	M1 A1	

Marking Scheme For 2025 GSS Sec 2G3 Mathematics End of Year Examination Paper 1

12	$\cos(\angle ACB) = \frac{0.4}{2}$ $\angle ACB = \cos^{-1}\left(\frac{0.4}{2}\right)$ $= 78.46°$ Since $78.46°$ is not between 74° and 76° the ladder is **not within the safe working angle.**	M1 M1 A1	
13(a)	$DEFC$	B1	
13(b)	$AF = DC = 5.2$ cm	B1	
13(c)	$\angle BCF = \angle EFC = 360° - 80° - 110° - 63°$ $= 107°$ $\angle BCD = 360° - 107° - 110°$ $= 143°$	M1 A1	
14(a)	$V = \frac{2}{3}\pi(6)^3$ $= 452.3893$ $\approx 452 \text{ cm}^3$	M1 A1	
14(b)	SA of cone $= \pi(4)(7) + \pi(4)^2 = 44\pi$ SA of hemisphere $= 3\pi(6)^2 = 108\pi$ Total Surface Area $= 44\pi + 108\pi$ $= 152\pi$ $= 477.52208$ Amount of paint needed $= \frac{477.52208}{400}$ $= 1.19$ litres$(3sf)$	M1 M1 A1	Award 1 mark for **either SA of cone or SA of hemisphere**

2025 Greenridge Secondary 2G3 EOY P2 2025 Marking Scheme

1

Qn		Answers	Mark Scheme
1	(a)	$\frac{2.40}{20}=0.12$ $\frac{6.00}{50}=0.12$ $\frac{9.60}{80}=0.12$ $\frac{12}{100}=0.12$ Since $\frac{C}{n}=0.12$, C and n are directly proportional.	M1 (must show all the values) A1
		OR $\frac{20}{2.40}=\frac{25}{3}$ $\frac{50}{6.00}=\frac{25}{3}$ $\frac{80}{9.60}=\frac{25}{3}$ $\frac{100}{12}=\frac{25}{3}$ Since $\frac{n}{C}=\frac{25}{3}$, C and n are directly proportional.	M1 (must show all the values) A1
	(b)	$C=0.12n$ OR $n=\frac{25}{3}C$	B1
	(c)	$27=0.12n$ $n=27\div0.12$ $n=225$	B1
2	(a)	90°	B1
	(b)	$\frac{AB}{DC}=\frac{BC}{CE}$ $\frac{9}{DC}=\frac{12}{8}$ $12DC=9\times8$ $DC=6\text{cm}$	M1 $\frac{DC}{9}=\frac{8}{12}$ A1

	(c)	$DE^2 = 6^2 + 8^2$ $DE^2 = 100$ $DE = \pm\sqrt{100}$ (reject-ve) $DE = 10\text{ cm}$	M1 A1
3	(a)	$200000 \div 100 \div 1000 = 2$	B1
	(b)	$11.2 \div 2 = 5.6\text{ cm}$	M1A1
	(c)	$1\text{cm} : 2\text{km}$ $(1\text{cm})^2 : (2\text{km})^2$ $1\text{cm}^2 : 4\text{km}^2$ $1.5 \times 4 = 6\text{km}^2$	 M1 A1
4	(a)	$4(2x + y) = 36$ $2x + y = 9$ $y = -2x + 9$	 B1
	(b)	$x - y = 2 + 4$ $x - y = 6$ $y = x - 6$	 B1
	(c)	$y = -2x + 9$ $y = x - 6$ $-2x + 9 = x - 6$ $-3x = -15$ $x = 5$ $y = x - 6$ $y = 5 - 6$ $y = -1$	 M1 (elimination or substitution) A1 A1
	(d)	Area of $A = 36\text{ cm}^2$ Area of $B = (x - y)^2$ $= (5 - (-1))^2$ $= 36\text{ cm}^2$ I agree with David. Since Area of A and Area of B are equal, all the squares can cover square B.	 M1 A1
5	(a)	$17.0 - 12.2 = 4.8\text{cm}$	B1
	(b)	16.2cm	B1
	(c)	15cm	B1 (accept 15.0 cm)
	(d)	$\frac{4}{21} \times 100 = 19\frac{1}{21}\%$	M1 – 4 A1 (accept 19.0%)
	(e)	Median for Class X $= \frac{14.9 + 15.3}{2} = 15.1\text{ cm}$ Median for Class Y = 15 cm Class X because the median height of Class X is higher than that of Class Y.	M1 – median for Class X A1

6	(a)	$p = 4 - 3(-5) - (-5)^2$ $p = -6$	B1
	(b)	Graph at the back	Total 3 marks 2 marks max (points) C2 – All points plotted correctly C1 – At least 5 points plotted correctly 1 mark (curve) C1 – Curve drawn smoothly
	(c)	6.3	B1 (Accept ± 0.1)
	(d)	$x = -1.5$	B1
	(ei)	Graph at the back	C1 – Line drawn accurately
	(ii)	−3.7 and −0.3	B1 B1 (Accept ± 0.1)
7	(a)	**73** 74 **79**	B1
	(bi)	$x + 6$	B1
	(ii)	$x(x+6) = 135$ $x^2 + 6x = 135$ $x^2 + 6x - 135 = 0$	M1 – form equation M1 – expand and simplify
	(iii)	$x^2 + 6x - 135 = 0$ $(x+15)(x-9) = 0$ $x = -15,\ x = 9$	M1 - factorise A1
	(iv)	$x = 9$ $9 + 10 + 15 = 34$	B1 – only accepted if done by solving equation
8	(a)	$300 \div 45 = 6\frac{2}{3}$ $4 \times 7 = \$28$	M1 (7 sessions) A1
	(b)	$\frac{1}{5.50} \times 100 = 18\frac{2}{11}\%$	M1 – $\frac{1}{5.50}$ A1 – accept 18.2 %
	(c)	$\frac{400}{350} = \frac{8}{7}$ She should exercise for $\frac{8}{7}$ times the duration that her friend exercised for.	M1 A1

4